SEETRONIC

Product Data Sheet

Product Type Speaker Connector

Product Model SLT8MPXX-W-BC

Customer Name

Manufacturer	Prepared	Checked	Approved

Customer	Received	Checked	Confirmed

Above specifications and information may have tolerances and have been updated.
Every effort has been made to ensure correctness upon release of this data sheet.

All Rights Reserved 2023

sales@seetronic-group.com
www.seetronic.com

SEETRONIC

Product Data Sheet

Product Type	**Speaker Connector**	
Product Model	**SLT8MPXX-W-BC**	

Product Features

- 8 pole socket speaker connector, black D-size plastic flange
- Current rating up to 30 A rms
- Extremely robust and easy to terminate
- D-type panel cut-out for easy mounting on standard panels

Above specifications and information may have tolerances and have been updated.
Every effort has been made to ensure correctness upon release of this data sheet.

All Rights Reserved 2023

sales@seetronic-group.com
www.seetronic.com

SEETRONIC

Product Data Sheet

Product Parameters

Item	Specification
Connection Type	Speaker
Gender	Male

Electrical Parameters

Item	Specification
Number of Contacts	8
Rated Current	30A rms
Rated Voltage	250V AC
Contact Resistance	≤ 3 mΩ
Dielectric Strength	3KV AC
Insulation Resistance	> 500 MΩ

Above specifications and information may have tolerances and have been updated.
Every effort has been made to ensure correctness upon release of this data sheet.

All Rights Reserved 2023

sales@seetronic-group.com
www.seetronic.com

SEETRONIC

Product Data Sheet

Mechanical Parameters

Item	Specification
Service Life	> 5000 mating cycles

Material and Environmental Parameters

Item	Specification
Housing	Zinc alloy, plated with black chrome
Contacts	Cu alloy
Contact plating	Ag
Flame-retardant grade	UL 94-V0
Temperature range	-30°C ~ +80°C
Protection degree	Matching with SEETRONIC 8 pole plug is IP65

Above specifications and information may have tolerances and have been updated.
Every effort has been made to ensure correctness upon release of this data sheet.

All Rights Reserved 2023

sales@seetronic-group.com
www.seetronic.com

Product Data Sheet

Product Drawing

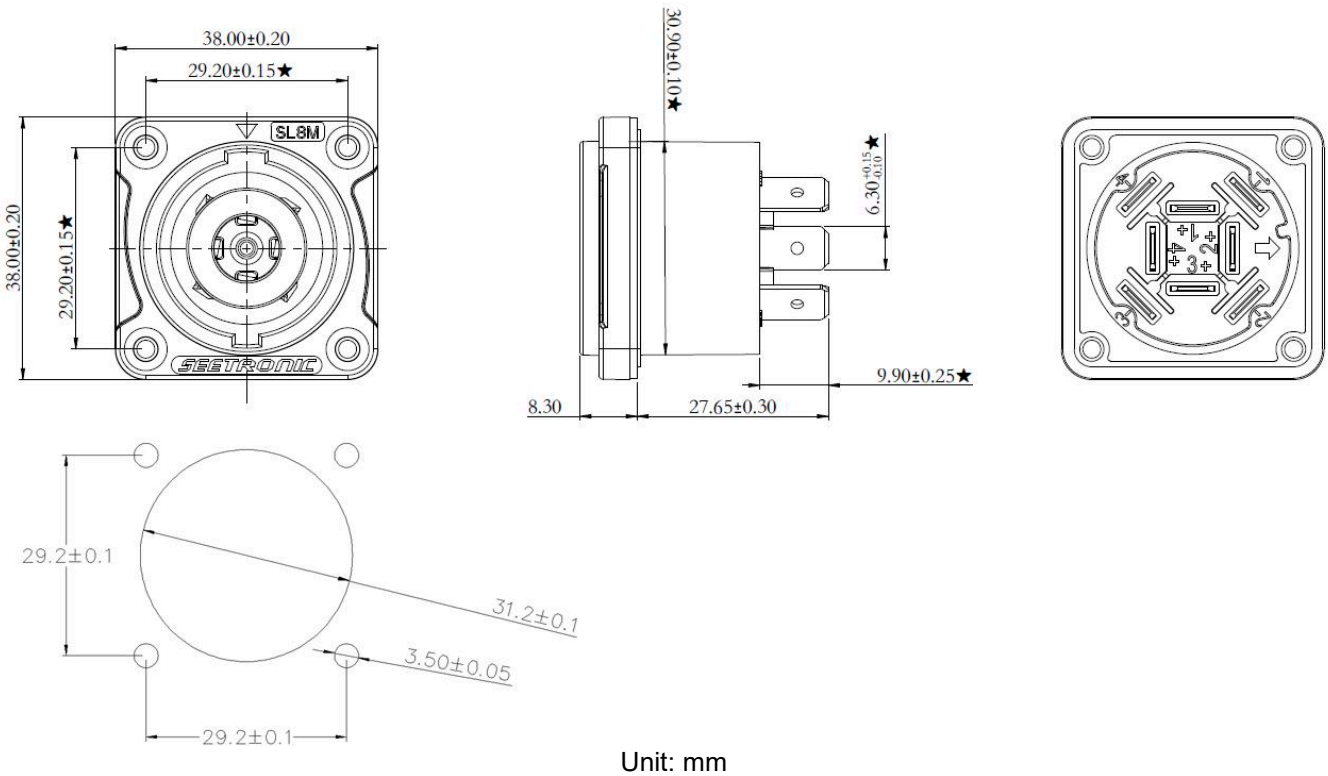

Unit: mm

Packaging Method

PE bag packing, 1 pc per bag

50 pcs per inner carton, 5 inner cartons per master carton (250 pcs per master carton)

Accessory

☑ No accessories	☐ Back fastener plate
☐ Screws and Nuts	☐ Other

Above specifications and information may have tolerances and have been updated.
Every effort has been made to ensure correctness upon release of this data sheet.

All Rights Reserved 2023

sales@seetronic-group.com
www.seetronic.com

SEETRONIC

Product Data Sheet

Assembly Instructions

Install on the front of the panel. Tighten the screws with 0.5 Nm torque in clockwise direction.	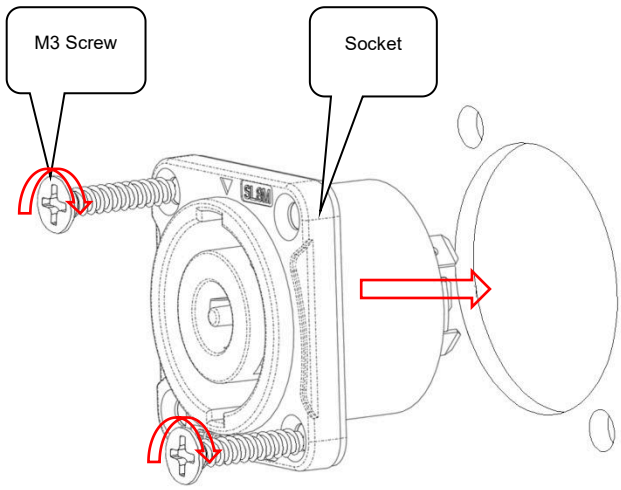
Type of Terminals	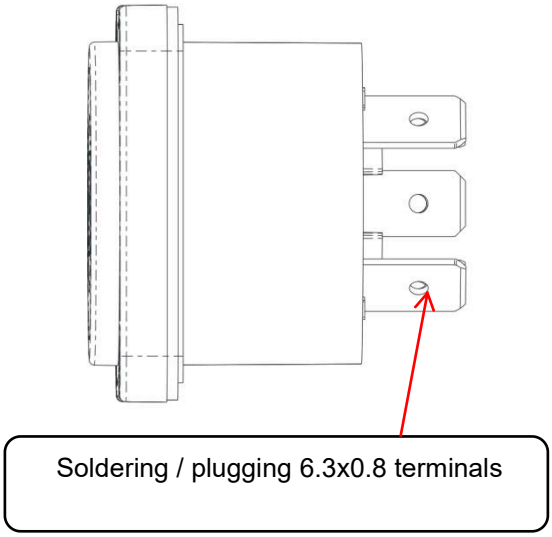

Above specifications and information may have tolerances and have been updated.
Every effort has been made to ensure correctness upon release of this data sheet.

All Rights Reserved 2023

sales@seetronic-group.com
www.seetronic.com